THIS DRAWING IS AN OVERALL REPRESENTATION OF THE APPARATUS AS PROPOSED.

THE EXACT DIMENSIONS, LOCATIONS OF ACCESSORIES AND/OR COMPONENTS MAY BE REVISED PENDING COMPLETE ENGINEERING OF THE CUSTOM REQUIREMENTS OF THE INDIVIDUAL APPARATUS ORDER.

IF THERE IS A DISCREPANCY BETWEEN THE BODYBUILDER PRINT AND THE WRITTEN PROPOSAL; THE SPECIFICATIONS WITHIN THE PROPOSAL PREVAIL.

This drawing along with any changes made and initialed by both the "Fire Department" & HME, Inc. represents what will be constructed and supplied to the "Fire Department." Any changes to the contract specifications and drawing after today's date will be addressed via appropriate change order signed and approved by both the "Fire Department" & HME, Inc.

APPROVED BY:_____ TITLE: _____
FIRE DEPARTMENT

APPROVED BY:_____ TITLE: _____
HME, Incorporated

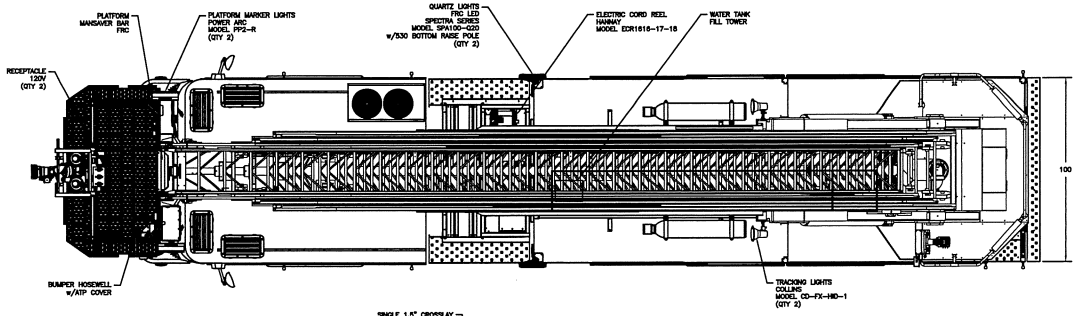

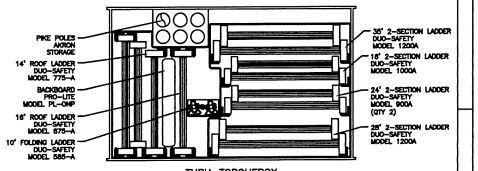

THRU-TORQUEBOX LADDER STORAGE

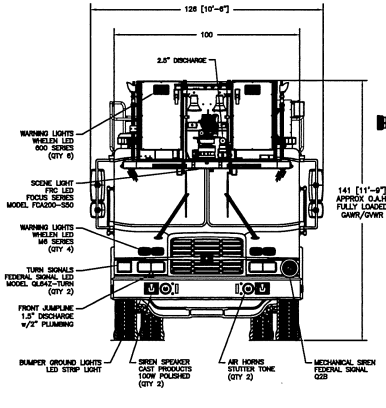

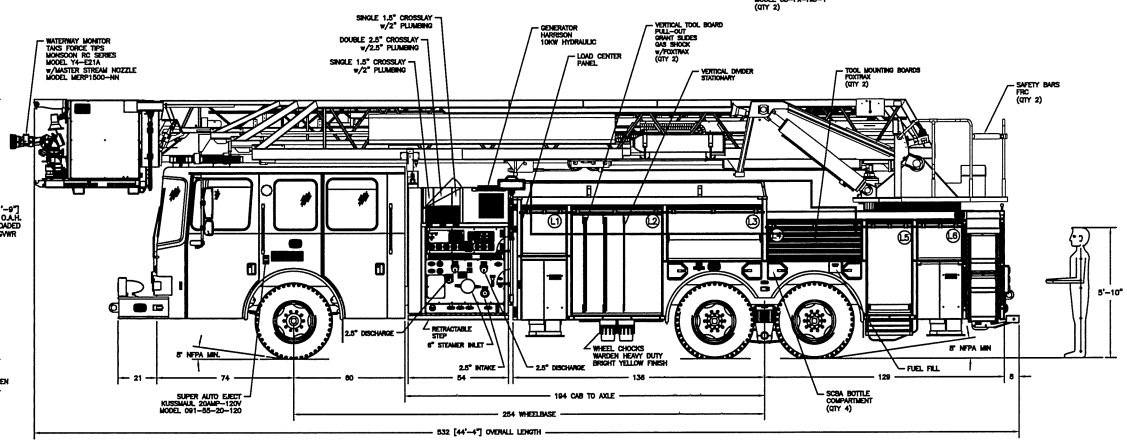

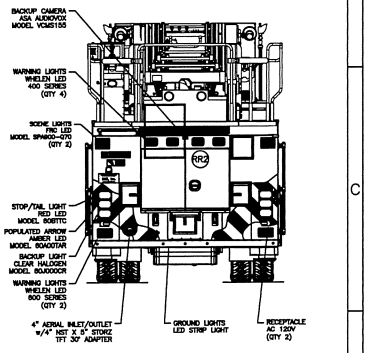

COMPARTMENTATION						
	BEHIND DOOR			CLEAR OPENING		
COMPT.	WIDTH	HEIGHT	DEPTH	DOOR WIDTH	DOOR HEIGHT	COMPT. VOLUME
L1:	31"	33"	24"	22"	23½"	14.2 FT³
L2:	51½"	63"	24"	47"	53½"	45.1 FT³
L3:	54"	33"	24"	49"	23½"	24.8 FT³
L4:	51½"	24"	24"	50"	16"	17.2 FT³
L5:	27"	54"	24"	22½"	45"	20.3 FT³
L6:	29"	24"	24"	23½"	16"	9.7 FT³
R1:	31"	33"	24"	22"	23½"	14.2 FT³
R2:	51½"	63"	24"	47"	53½"	45.1 FT³
R3:	54"	33"	24"	49"	23½"	24.8 FT³
R4:	51½"	24"	24"	50"	16"	17.2 FT³
R5:	27"	54"	24"	22½"	45"	20.3 FT³
R6:	47"	24"	24"	43½"	16"	15.6 FT³
R7:	18"	30"	12"	16"	26"	3.8 FT³

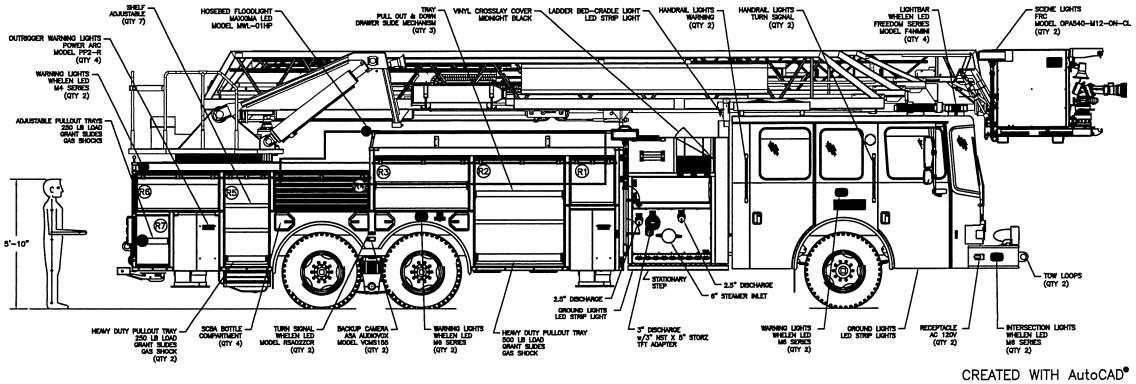

CREATED WITH AutoCAD®

LET	BY	DATE	REVISION
H	DM	27 FEB '18	CHANGE ORDER
G	DM	17 JAN '18	CHANGE ORDER
F	DM	19 DEC '17	CHANGE ORDER
E	DM	12 DEC '17	CLEAN ORDER RELEASE
D	DM	05 DEC '17	CHANGE ORDER
C	DM	12 OCT '17	CHANGE ORDER
B	DM	06 SEP '17	CHANGE ORDER
A	PLS	10 AUG '17	ORIGINAL RELEASE

HME INCORPORATED
1950 BYRON CENTER AVE.
WYOMING, MI. 49509

THIS PRINT IS PROVIDED ON A RESTRICTED BASIS AND IS NOT TO BE USED IN ANY WAY DETRIMENTAL TO THE INTERESTS OF HME, INC.

NAME: HME 104 AERIAL PLATFORM

DRAWN	DATE	APPROVED	DRAWING FILE
P. SWAGER	7 AUG '17	N/A	23107-HME 104 AERIAL PLATFORM.dwg

THIRD ANGLE PROJECTION | SIZE: B | NUMBER: 23107 | SCALE: NTS | SHEET 1 OF 1