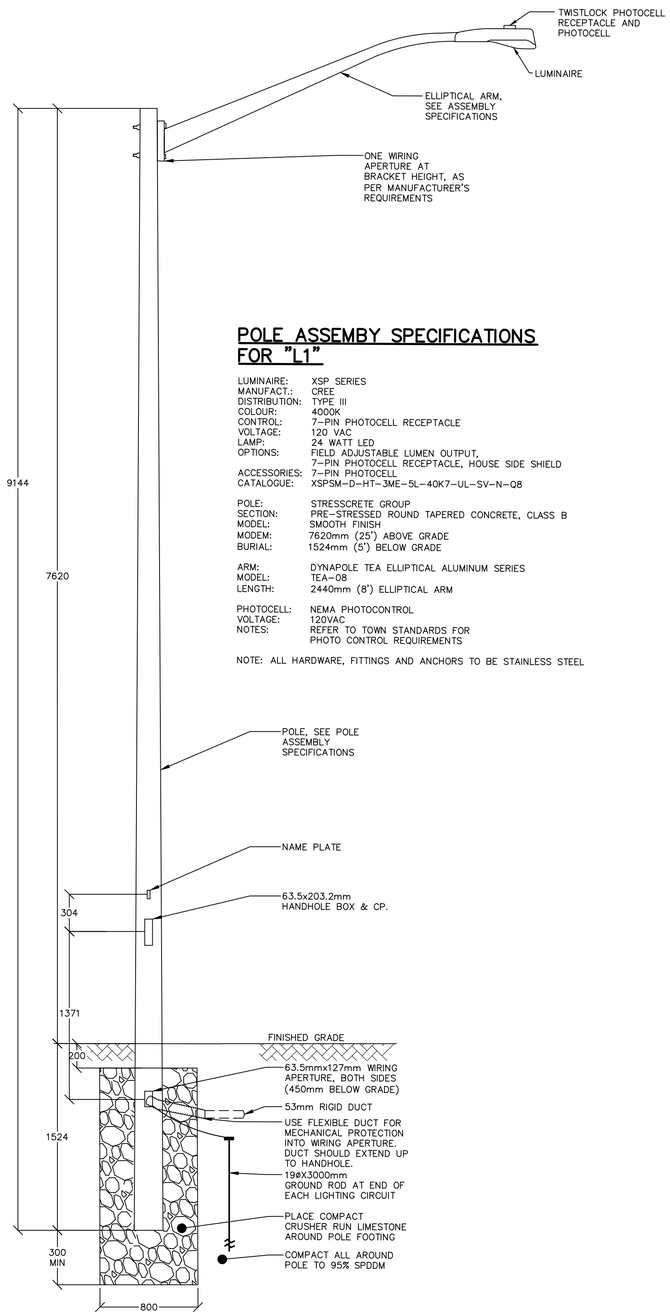

POLE ASSEMBY SPECIFICATIONS FOR "L1"

LUMINAIRE: XSP SERIES
MANUFACT.: CREE
DISTRIBUTION: TYPE III
COLOUR: 4000K
CONTROL: 7-PIN PHOTOCELL RECEPTACLE
VOLTAGE: 120 VAC
LAMP: 24 WATT LED
OPTIONS: FIELD ADJUSTABLE LUMEN OUTPUT, 7-PIN PHOTOCELL RECEPTACLE, HOUSE SIDE SHIELD
ACCESSORIES: 7-PIN PHOTOCELL
CATALOGUE: XSPSM-D-HT-3ME-5L-40K7-UL-SV-N-Q8

POLE: STRESSCRETE GROUP
SECTION: PRE-STRESSED ROUND TAPERED CONCRETE, CLASS B
MODEL: SMOOTH FINISH
MODEM: 7620mm (25') ABOVE GRADE
BURIAL: 1524mm (5') BELOW GRADE

ARM: DYNAPOLE TEA ELLIPTICAL ALUMINUM SERIES
MODEL: TEA-08
LENGTH: 2440mm (8') ELLIPTICAL ARM

PHOTOCELL: NEMA PHOTOCONTROL
VOLTAGE: 120VAC
NOTES: REFER TO TOWN STANDARDS FOR PHOTO CONTROL REQUIREMENTS

NOTE: ALL HARDWARE, FITTINGS AND ANCHORS TO BE STAINLESS STEEL

1 E2.3 STREET LIGHT LUMINAIRE AND POLE

– NTS, DIMENSIONS SHOWN IN MILLIMETERS (mm)

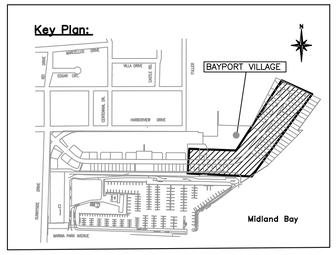

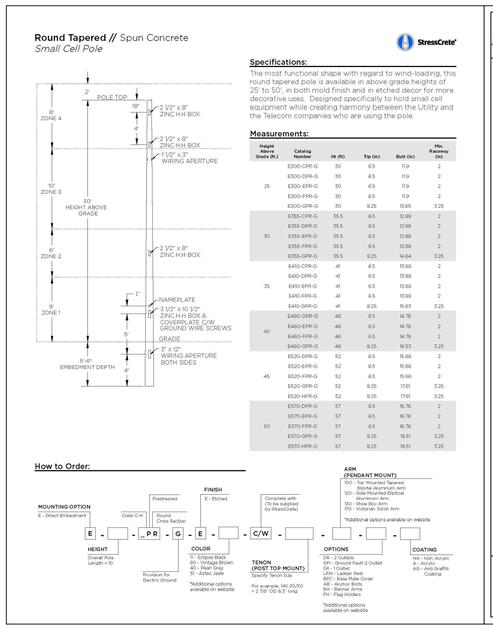

Round Tapered // Spun Concrete
Small Cell Pole

StressCrete

Specifications:

The most functional shape with regard to wind-loading, this round tapered pole is available in above grade heights of 25' to 50', in both mold finish and in etched decor for more decorative uses. Designed specifically to hold small cell equipment while creating harmony between the Utility and the Telecom companies who are using the pole.

Measurements:

Height Above Grade (ft.)	Catalog Number	Ht. (ft)	Tip (in)	Butt (in)	Hin. Raceway (in)
	E300-CPR-G	30	6.5	11.9	2
	E300-DPR-G	30	6.5	11.9	2
25	E300-EPR-G	30	6.5	11.9	2
	E300-FPR-G	30	6.5	11.9	2
	E300-GPR-G	30	8.25	13.65	3.25
	E355-CPR-G	35.5	6.5	12.99	2
	E355-DPR-G	35.5	6.5	12.99	2
30	E355-EPR-G	35.5	6.5	12.99	2
	E355-FPR-G	35.5	6.5	12.99	2
	E355-GPR-G	35.5	8.25	14.64	3.25
	E410-CPR-G	41	6.5	13.98	2
	E410-DPR-G	41	6.5	13.98	2
35	E410-EPR-G	41	6.5	13.98	2
	E410-FPR-G	41	6.5	13.98	2
	E410-GPR-G	41	8.25	15.63	3.25
	E460-DPR-G	46	6.5	14.76	2
	E460-EPR-G	46	6.5	14.76	2
40	E460-FPR-G	46	6.5	14.76	2
	E460-GPR-G	46	8.25	16.53	3.25
	E520-DPR-G	52	6.5	15.96	2
	E520-EPR-G	52	6.5	15.96	2
45	E520-FPR-G	52	6.5	15.96	2
	E520-GPR-G	52	8.25	17.61	3.25
	E520-HPR-G	52	8.25	17.61	3.25
	E570-DPR-G	57	6.5	16.76	2
	E570-EPR-G	57	6.5	16.76	2
50	E570-FPR-G	57	6.5	16.76	2
	E570-GPR-G	57	8.25	18.51	3.25
	E570-HPR-G	57	8.25	18.51	3.25

How to Order:

MOUNTING OPTION: E - Direct Embedment
Class C/H
Prestressed
Round Cross Section
FINISH: E - Etched
Complete with (To be supplied by StressCrete)

E - - PR - G - E - - C/W - - - - -

HEIGHT: Overall Pole Length x 10
Provision for Electric Ground
COLOR: TI - Eclipse Black; BO - Vintage Brown; AO - Pearl Gray; SI - Aztec Jade; *Additional options available on website
TENON (POST TOP MOUNT): Specify Tenon Size. For example, 140.30/50 = 2 7/8" OD & 3" long
ARM (PENDANT MOUNT): 100 - Top Mounted Tapered Aluminum Arm; 110 - Side Mounted Aluminum Arm; 120 - Side Mounted Elliptical Aluminum Arm; 130 - Show Box Arm; 170 - Victorian Scroll Arm; *Additional options available on website
OPTIONS: DR - 2 Outlets; DRI - Ground Fault 2 Outlet; SR - 1 Outlet; LRR - Ladder Rest; BPC - Base Plate Cover; FC - Flagpole Cap; BA - Banner Arms; FH - Flag Holders; *Additional options available on website
COATING: NA - Non Aerylic Acrylic; AG - Anti Graffiti Coating

2 E2.3 L1 POLE, ARM AND LUMINARIE CATALOGUE SHEETS

–NTS

TEA series

tapered elliptical aluminum

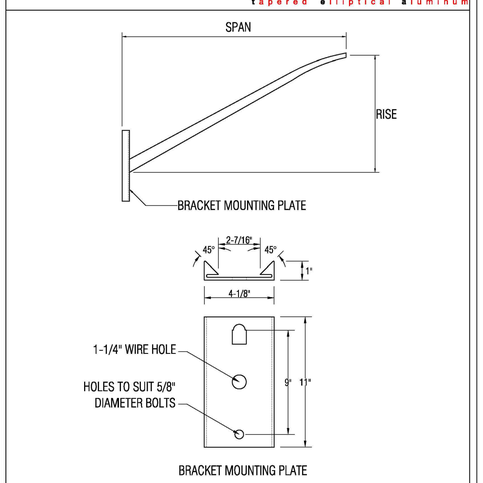

DYNAPOLE
www.dynapole.com
2425 Lucknow Drive, Mississauga ON L5G 1H1 Canada
Tel. (905) 671-1507 Fax (905) 671-4606 Toll-Free 1-877-DYNAPOLE

DRAWING TITLE: TAPERED ELLIPTICAL ALUMINUM	MODEL: TEA
	DRAWN BY: CGT
	DATE: 07/19/04
NOTES:	SCALE: NTS

XSP Series

XSPSM LED Street/Area Luminaire - Small

Rev. Date: YS 12/04/2019

Product Description

In addition to a low initial cost, the XSPSM LED Street/Area luminaire maintains the familiar look of the traditional cobrahead design and delivers substantial energy savings while reducing maintenance time and costs. The hassle-free design of the XSP small luminaire includes tool-less entry and +/- 5° fixture leveling for easy installation. Our NanoOptic® Precision Delivery Grid™ optic achieves better optical control than traditional street and area lighting fixtures and efficiently delivers white uniform light for safer-feeling communities.
Applications: Residential roads, collector roads, parking lots, and general area spaces

Performance Summary

NanoOptic® Precision Delivery Grid™ optic

Assembled in the U.S.A. of U.S. and imported parts

Initial Delivered Lumens: Up to 7,825

Efficacy: Up to 113 LPW

CRI: Minimum 70 CRI

CCT: 2700K, 3000K, 4000K, 5000K, 5700K

Limited Warranty*: 10 years on luminaire/10 years on Colorfast DeltaGuard® finish

* See http://creelighting.com/warranty for warranty terms

Accessories

Field-Installed		
Backlight Control Shield XA-SPKSBLS - Backlight control mounting height cutoff - Polycarbonate construction - Refer to initial delivered lumen tables for lumen output	**Bird Spikes** XSP-BRDSPKS	**Shorting Cap** XA-XSLSHRT

Ordering Information

Example: XSPSM-D-HT-2L0-5L-27K7-UL-SV-N

XSPSM	D	HT						N
Product	**Version**	**Mounting**	**Optic**	**Lumen Package****	**CCT/CRI**	**Voltage**	**Color Options**	**Utility Label/ Receptacle**	**Options**
XSPSM	**D**	**HT** Horizontal Tenon	**Asymmetric Type II** Type II Long **2ME*** Type II Medium **3ME*** Type III Medium **4ME*** Type IV Medium **Symmetric SQ8** Type V Short	**5L** 5,300 Lumens **8L** 8,000 Lumens	**27K7** 2700K, 70 CRI **30K7** 3000K, 70 CRI **40K7** 4000K, 70 CRI **50K7** 5000K, 70 CRI **57K7** 5700K, 70 CRI	**UL** Universal 120-277V **UH** Universal 347-480V	**BK** Black **BZ** Bronze **SV** Silver	**N** **Utility Label and NEMA® 7-Pin Photocell Receptacle** - External wattage label per ANSI C136.41 - 7-pin receptacle per ANSI C136.41 - Receptacle leads are factory connected to the driver (unswitched hot) or shorting cap (by others)	**DLL1 DALI Compatible** - Available with UL voltage only - Not available with D or F options **05/08/07/06/05/04/03/02/01** **Field Adjustable Output** - Must select QR, QW, QT, QA, QN, QD, QL options - Offers full range lumen adjustability - Includes wattage label for setting selected - Refer to pages 8 & 9 for power and lumen values - Luminaire may also be dimmed through 7-Pin receptacle with use of dimming control by others **XR/X7/X6/X5/X4/X3/X2/X1** **Locked Lumen Output** - Must select XB, X7, X6, X5, X4, X3, X2, or X1 options. Output is permanently locked to the setting selected - Includes wattage label for setting selected - Refer to pages 8 & 9 for power and lumen values - Dimming is only available through 7-Pin receptacle with use of dimming control by others

* Available with Backlight Shield when ordered with field-installed accessory (see table above)
** Lumen Package codes identify approximate light output only. Actual lumen output levels may vary depending on CCT and optic selection. Refer to Initial Delivered Lumen tables for specific lumen values

US: creelighting.com (800) 236-4800
Canada: creelighting-canada.com (800) 473-1234

CREE LIGHTING

DISCLAIMER AND COPYRIGHT	BENCHMARKS	NOTES
CONTRACTOR MUST VERIFY ALL DIMENSIONS AND BE RESPONSIBLE FOR SAME. ANY DISCREPANCIES MUST BE REPORTED TO THE ENGINEER BEFORE COMMENCING WORK. DRAWINGS ARE NOT TO BE SCALED. TATHAM ENGINEERING LIMITED CLAIMS COPYRIGHT TO THIS DRAWING WHICH MAY NOT BE USED FOR ANY PURPOSE OTHER THAN THAT PROVIDED IN THE CONTRACT BETWEEN THE OWNER/CLIENT AND THE ENGINEER WITHOUT THE EXPRESS CONSENT OF TATHAM ENGINEERING LIMITED.		

No.	REVISION DESCRIPTION	DATE
1.	ISSUED FOR TOWN APPROVAL	APR 2022
2.	ISSUED FOR FINAL COORDINATION	SEP 2022
3.	ISSUED FOR TOWN APPROVAL	MAR 2024
4.	BLOCKS 15-17 RE-ISSUED FOR TOWN APPROVAL	AUG 2024
5.	BLOCKS 18-20 ISSUED FOR TOWN APPROVAL	FEB 2025

ENGINEER STAMP

LICENSED PROFESSIONAL ENGINEER
S. R. S. TAYLOR
100518503
12FEB'25
PROVINCE OF ONTARIO

NOT FOR CONSTRUCTION

BAYPORT TOWN HOUSE PROJECT BLOCK 15-20
TOWN OF MIDLAND, ONT

LIGHTING DETAILS – SHEET 2

TATHAM ENGINEERING

DESIGN: SRT	FILE: 121293	DWG:
DRAWN: RJW	DATE: SEPT 2022	**E2.3**
CHECK: SRT	SCALE: NTS	

Drawing Name: 121293 E3.3 Lighting Layouts Block 15-20.dwg, Plotted: Feb 12, 2025